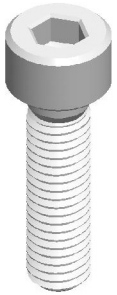

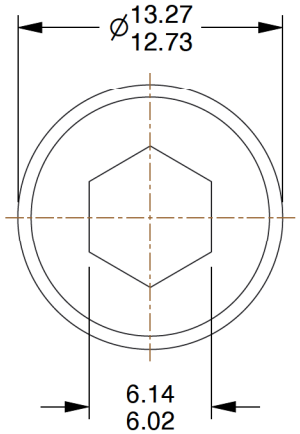

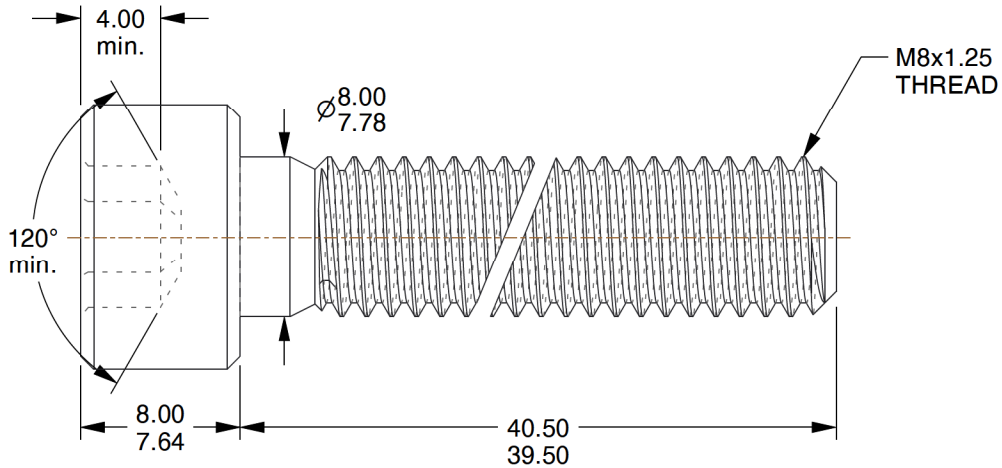

Dimensions: ISO 4762
Material: A4 Stainless Steel per ISO 3506-1
Mechanical: A4-80 Stainless Steel per ISO 3506-1
Threads: 6g per ISO 724; ISO 965-1
Product Marking: Manufacturer's ID and A4-80 on sizes M5 and larger
Finish: ASTM A380/A380M
Material Test Reports: The MTR must have documented lot traceability, dimensional results, full chemical test results and full mechanical test results to the specification(s) above. In addition, the MTR shall be in full compliance with MTR Requirements.

UNITS
MM

4762480840	M8-1.25 X 40mm, Hex socket head cap screw Full thread ISO 4762 A4-80